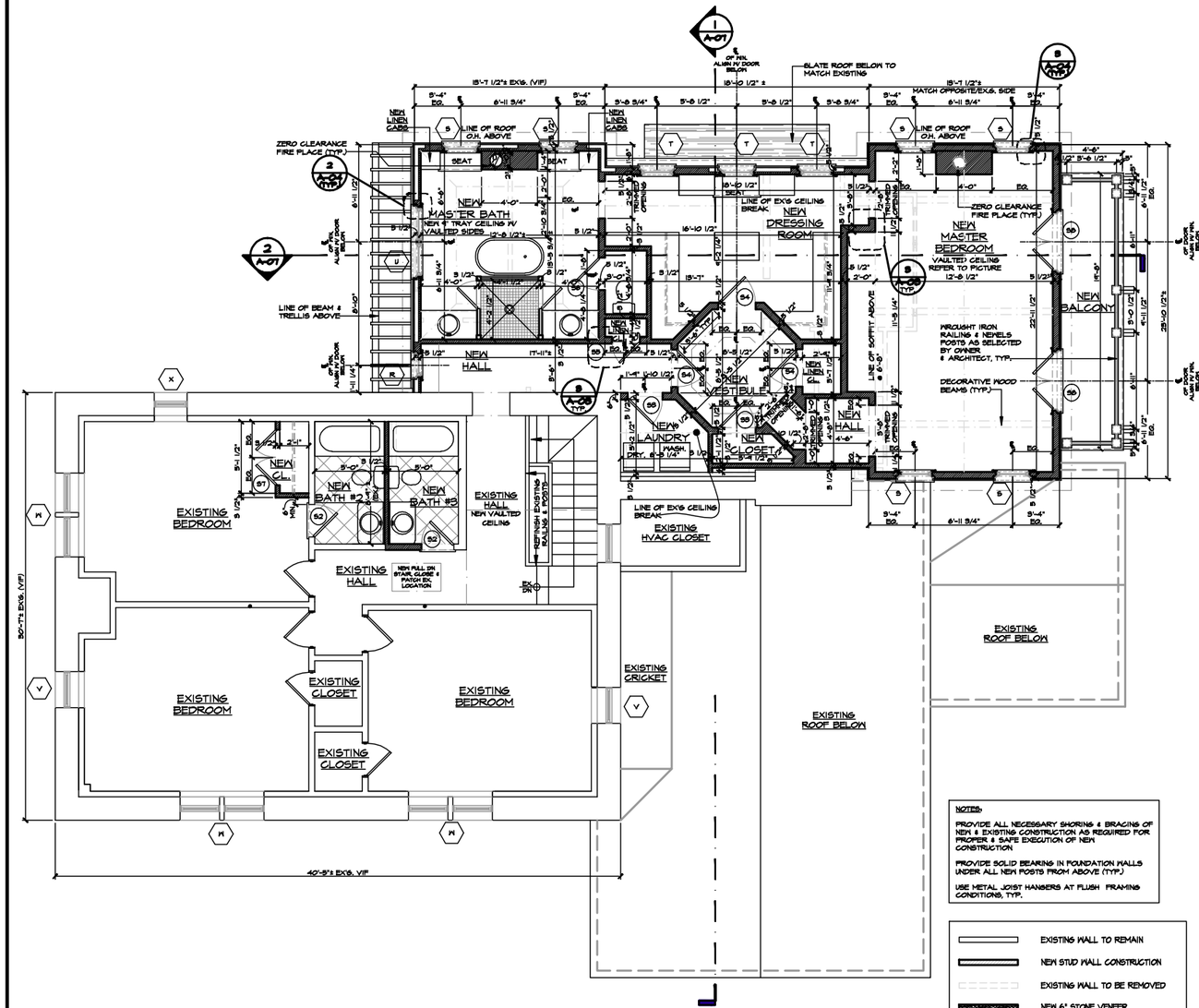

NOTES:

PROVIDE ALL NECESSARY SHORING & BRACING OF NEW & EXISTING CONSTRUCTION AS REQUIRED FOR PROPER & SAFE EXECUTION OF NEW CONSTRUCTION

PROVIDE SOLID BEARING IN FOUNDATION WALLS UNDER ALL NEW POSTS FROM ABOVE (TYP.)

USE METAL JOIST HANGERS AT FLUSH FRAMING CONDITIONS, TYP.

EXISTING WALL TO REMAIN

NEW STUD WALL CONSTRUCTION

EXISTING WALL TO BE REMOVED

NEW 6" STONE VENEER

01 SECOND FLOOR PLAN
SCALE: 1/4" = 1'-0"

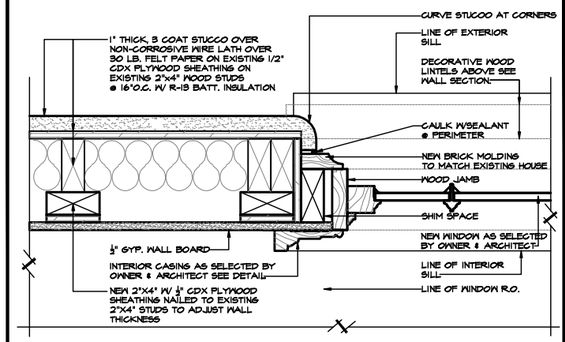

02 TYPICAL JAMB DETAIL @ EX'G. WOOD CONST. AREAS
SCALE: 3" = 1'-0"

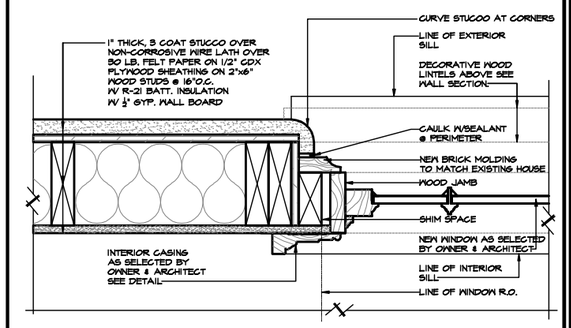

03 TYPICAL JAMB DETAIL @ NEW WOOD CONST. AREAS
SCALE: 3" = 1'-0"

04 TYPICAL INTERIOR CASING DETAIL
SCALE: 3" = 1'-0"

JOYCE / SZERLIP RESIDENCE

55 STATE PARK ROAD
CHESTER,
NJ 07930

REV.	DATE	ISSUE	REMARK
1	11.02.11	REVISIONS	GENERAL REVISIONS
		FOR BIDDING	
		FOR FILING	
		FOR CONSTRUCTION	

JOB #
SET: G

- SECOND FLOOR PLAN
-TYPICAL JAM DETAILS
-TYP. INTERIOR CASING DETAIL

AS,TS | HT

HILAND HALL TURNER
NJ LIC. # 12074

HILAND HALL TURNER & ASSOCIATES P.A.
ARCHITECTS
2 CLAREMONT ROAD, BERNARDSVILLE, NJ 07924 908-696-0012

A-04